Cambridge International AS & A Level

Cambridge International Examinations
Cambridge International Advanced Subsidiary and Advanced Level

CANDIDATE NAME									
CENTRE NUMBER						CANDIDATE NUMBER			

8064076875

PHYSICS **9702/23**

Paper 2 AS Level Structured Questions **May/June 2018**

1 hour 15 minutes

Candidates answer on the Question Paper.

No Additional Materials are required.

READ THESE INSTRUCTIONS FIRST

Write your Centre number, candidate number and name on all the work you hand in.
Write in dark blue or black pen.
You may use an HB pencil for any diagrams or graphs.
Do not use staples, paper clips, glue or correction fluid.
DO **NOT** WRITE IN ANY BARCODES.

Answer **all** questions.

Electronic calculators may be used.
You may lose marks if you do not show your working or if you do not use appropriate units.

At the end of the examination, fasten all your work securely together.
The number of marks is given in brackets [ ] at the end of each question or part question.

This document consists of **15** printed pages and **1** blank page.

© UCLES 2018

CAMBRIDGE International Examinations

Data

speed of light in free space	$c = 3.00 \times 10^{8}\,\text{m s}^{-1}$
permeability of free space	$\mu_0 = 4\pi \times 10^{-7}\,\text{H m}^{-1}$
permittivity of free space	$\varepsilon_0 = 8.85 \times 10^{-12}\,\text{F m}^{-1}$
	$(\frac{1}{4\pi\varepsilon_0} = 8.99 \times 10^{9}\,\text{m F}^{-1})$
elementary charge	$e = 1.60 \times 10^{-19}\,\text{C}$
the Planck constant	$h = 6.63 \times 10^{-34}\,\text{J s}$
unified atomic mass unit	$1\,\text{u} = 1.66 \times 10^{-27}\,\text{kg}$
rest mass of electron	$m_e = 9.11 \times 10^{-31}\,\text{kg}$
rest mass of proton	$m_p = 1.67 \times 10^{-27}\,\text{kg}$
molar gas constant	$R = 8.31\,\text{J K}^{-1}\,\text{mol}^{-1}$
the Avogadro constant	$N_A = 6.02 \times 10^{23}\,\text{mol}^{-1}$
the Boltzmann constant	$k = 1.38 \times 10^{-23}\,\text{J K}^{-1}$
gravitational constant	$G = 6.67 \times 10^{-11}\,\text{N m}^2\,\text{kg}^{-2}$
acceleration of free fall	$g = 9.81\,\text{m s}^{-2}$

© UCLES 2018

Formulae

uniformly accelerated motion	$s = ut + \frac{1}{2}at^2$ $v^2 = u^2 + 2as$
work done on/by a gas	$W = p\Delta V$
gravitational potential	$\phi = -\frac{Gm}{r}$
hydrostatic pressure	$p = \rho gh$
pressure of an ideal gas	$p = \frac{1}{3}\frac{Nm}{V}\langle c^2 \rangle$
simple harmonic motion	$a = -\omega^2 x$
velocity of particle in s.h.m.	$v = v_0 \cos \omega t$ $v = \pm \omega\sqrt{(x_0^2 - x^2)}$
Doppler effect	$f_o = \frac{f_s v}{v \pm v_s}$
electric potential	$V = \frac{Q}{4\pi\varepsilon_0 r}$
capacitors in series	$1/C = 1/C_1 + 1/C_2 + \ldots$
capacitors in parallel	$C = C_1 + C_2 + \ldots$
energy of charged capacitor	$W = \frac{1}{2}QV$
electric current	$I = Anvq$
resistors in series	$R = R_1 + R_2 + \ldots$
resistors in parallel	$1/R = 1/R_1 + 1/R_2 + \ldots$
Hall voltage	$V_H = \frac{BI}{ntq}$
alternating current/voltage	$x = x_0 \sin \omega t$
radioactive decay	$x = x_0 \exp(-\lambda t)$
decay constant	$\lambda = \frac{0.693}{t_{\frac{1}{2}}}$

© UCLES 2018

[Turn over

BLANK PAGE

© UCLES 2018

Answer **all** the questions in the spaces provided.

1 **(a)** An analogue voltmeter is used to take measurements of a constant potential difference across a resistor.

For these measurements, describe **one** example of

(i) a systematic error,

.....

.....[1]

(ii) a random error.

.....

.....[1]

(b) The potential difference across a resistor is measured as 5.0 V ± 0.1 V. The resistor is labelled as having a resistance of 125 Ω ± 3%.

(i) Calculate the power dissipated by the resistor.

power = ... W [2]

(ii) Calculate the percentage uncertainty in the calculated power.

percentage uncertainty = ... % [2]

(iii) Determine the value of the power, with its absolute uncertainty, to an appropriate number of significant figures.

power = ... ± ..... W [2]

[Total: 8]

2 **(a)** State what is meant by *work done*.

.....

.....[1]

(b) A diver releases a solid sphere of radius 16 cm from the sea bed. The sphere moves vertically upwards towards the surface of the sea.

The weight of the sphere is 20 N. The upthrust acting on the sphere is 170 N. The upthrust remains constant as the sphere moves upwards.

(i) Calculate the density of the material of the sphere.

density = ... $kg\,m^{-3}$ [2]

(ii) Briefly explain the origin of the upthrust acting on the sphere.

.....

.....

.....[1]

(iii) Calculate the acceleration of the sphere as it is released from rest.

acceleration = ... $m\,s^{-2}$ [2]

© UCLES 2018

(iv) The viscous (drag) force D acting on the sphere is given by

$$D = kr^2v^2$$

where r is the radius of the sphere and v is its speed.
The constant k is equal to $810\,\text{kg}\,\text{m}^{-3}$.

Determine the constant (terminal) speed reached by the sphere.

speed = ... $\text{m}\,\text{s}^{-1}$ [3]

(v) The diver releases a different sphere that moves with a constant speed of $6.30\,\text{m}\,\text{s}^{-1}$ directly towards a stationary ship. The sphere emits sound of frequency 4850 Hz. The ship detects sound of frequency 4870 Hz as the sphere moves towards it.

Determine, to three significant figures, the speed of the sound in the water.

speed = ... $\text{m}\,\text{s}^{-1}$ [2]

[Total: 11]

© UCLES 2018

[Turn over

3 A ball is thrown vertically upwards towards a ceiling and then rebounds, as illustrated in Fig. 3.1.

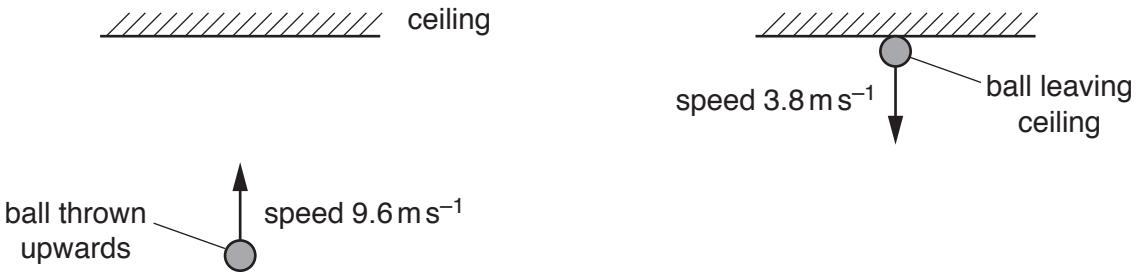

Fig. 3.1

The ball is thrown with speed 9.6 m s^{-1} and takes a time of 0.37 s to reach the ceiling. The ball is then in contact with the ceiling for a further time of 0.085 s until leaving it with a speed of 3.8 m s^{-1}. The mass of the ball is 0.056 kg. Assume that air resistance is negligible.

(a) Show that the ball reaches the ceiling with a speed of 6.0 m s^{-1}.

[1]

(b) Calculate the height of the ceiling above the point from which the ball was thrown.

height = ... m [2]

(c) Calculate

(i) the increase in gravitational potential energy of the ball for its movement from its initial position to the ceiling,

increase in gravitational potential energy = ... J [2]

© UCLES 2018

(ii) the decrease in kinetic energy of the ball while it is in contact with the ceiling.

decrease in kinetic energy = ... J [2]

(d) State how Newton's third law applies to the collision between the ball and the ceiling.

.....

.....

.....

.....[2]

(e) Calculate the change in momentum of the ball during the collision.

change in momentum = ... N s [2]

(f) Determine the magnitude of the average force exerted by the ceiling on the ball during the collision.

average force = ... N [2]

[Total: 13]

4 **(a)** Define the *Young modulus* of a material.

.....

.....[1]

(b) A metal rod is compressed, as shown in Fig. 4.1.

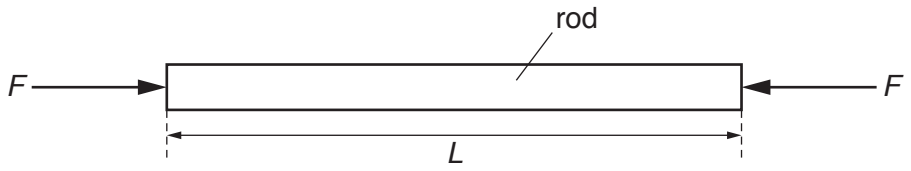

Fig. 4.1

The variation with compressive force F of the length L of the rod is shown in Fig. 4.2.

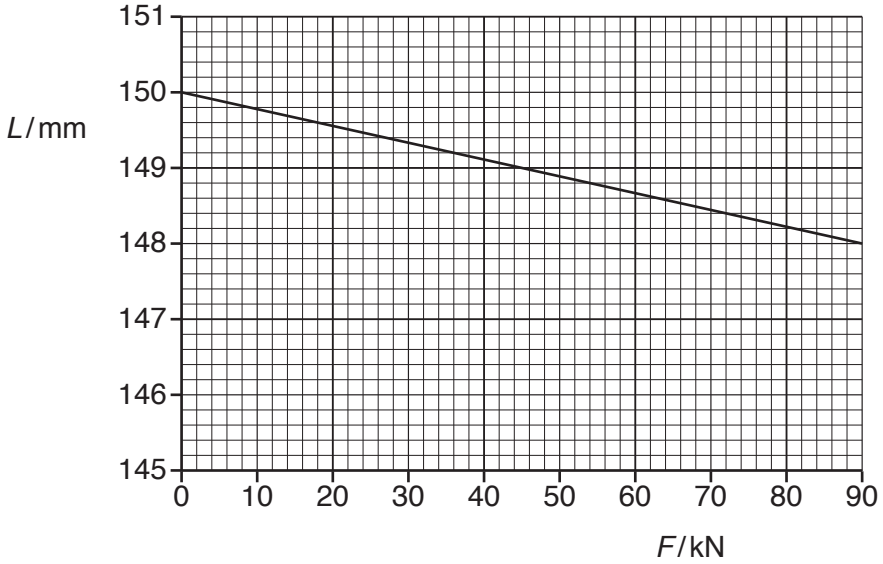

Fig. 4.2

Use Fig. 4.2 to

(i) determine the spring constant k of the rod,

k = ... $N\,m^{-1}$ [2]

© UCLES 2018

(ii) determine the strain energy stored in the rod for $F = 90\,\text{kN}$.

strain energy = ... J [3]

(c) The rod in **(b)** has cross-sectional area A and is made of metal of Young modulus E. It is now replaced by a new rod of the same original length. The new rod has cross-sectional area $A/3$ and is made of metal of Young modulus $2E$. The compression of the new rod obeys Hooke's law.

On Fig. 4.2, sketch the variation with F of the length L for the new rod from $F = 0$ to $F = 90\,\text{kN}$. [2]

[Total: 8]

© UCLES 2018

[Turn over

5 **(a)** State the relationship between the intensity and the amplitude of a wave.

.....

.....[1]

(b) Microwaves of the same amplitude and wavelength are emitted in phase from two sources P and Q. The sources are arranged as shown in Fig. 5.1.

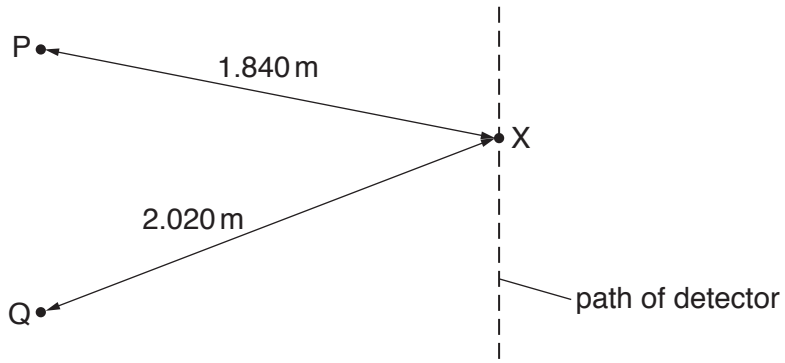

Fig. 5.1

A microwave detector is moved along a path that is parallel to the line joining P and Q. A series of intensity maxima and intensity minima are detected.

When the detector is at a point X, the distance PX is 1.840 m and the distance QX is 2.020 m. The microwaves have a wavelength of 6.0 cm.

(i) Calculate the frequency of the microwaves.

frequency = ... Hz [2]

(ii) Describe and explain the intensity of the microwaves detected at X.

.....

.....

.....

.....

.....[3]

© UCLES 2018

(iii) Describe the effect on the interference pattern along the path of the detector due to each of the following separate changes.

1. The wavelength of the microwaves decreases.

.....

.....

2. The phase difference between the microwaves emitted from the sources changes to 180°.

.....

.....

[2]

[Total: 8]

6 A wire X has a constant resistance per unit length of $3.0\,\Omega\,m^{-1}$ and a diameter of 0.48 mm.

(a) Calculate the resistivity of the metal of wire X.

resistivity = ... Ω m [3]

(b) The wire X is connected into the circuit shown in Fig. 6.1.

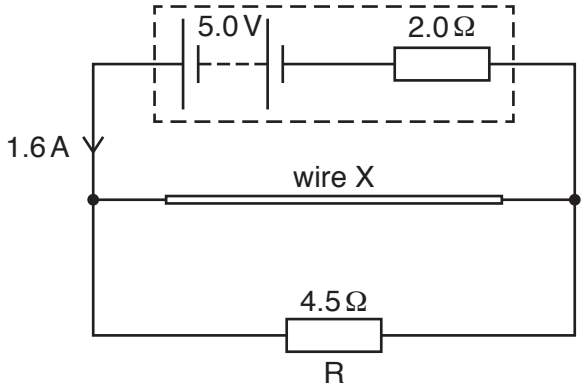

Fig. 6.1

The battery has an electromotive force (e.m.f.) of 5.0 V and an internal resistance of 2.0 Ω. The wire X and a resistor R of resistance 4.5 Ω are connected in parallel. The current in the battery is 1.6 A.

(i) Calculate the potential difference across resistor R.

potential difference = ... V [1]

© UCLES 2018

(ii) Determine, for wire X,

1. its resistance,

resistance = ... Ω [3]

2. its length.

length = ... m [1]

[Total: 8]

Please turn over for Question 7.

7 A graph of nucleon number A against proton number Z is shown in Fig. 7.1.

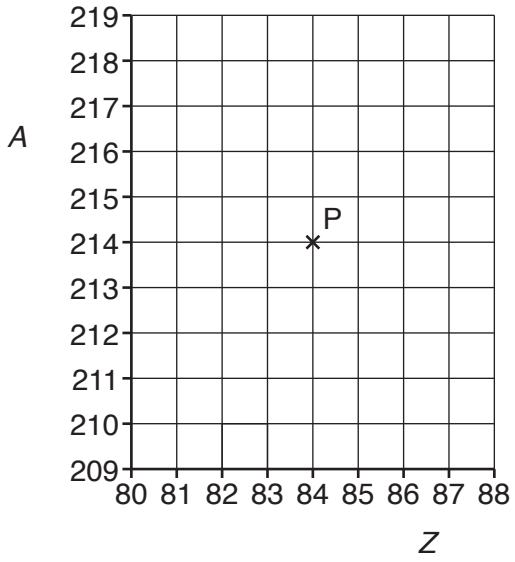

Fig. 7.1

The graph shows a cross (labelled P) that represents a nucleus P.

Nucleus P decays by emitting an α particle to form a nucleus Q.
Nucleus Q then decays by emitting a β^- particle to form a nucleus R.

(a) On Fig. 7.1, use a cross to represent

(i) nucleus Q (label this cross Q), [1]

(ii) nucleus R (label this cross R). [1]

(b) State the name of the class (group) of particles that includes the β^- particle.

.....[1]

(c) The quark composition of one nucleon in Q is changed during the emission of the β^- particle. Describe this change to the quark composition.

.....

.....[1]

[Total: 4]

Permission to reproduce items where third-party owned material protected by copyright is included has been sought and cleared where possible. Every reasonable effort has been made by the publisher (UCLES) to trace copyright holders, but if any items requiring clearance have unwittingly been included, the publisher will be pleased to make amends at the earliest possible opportunity.

To avoid the issue of disclosure of answer-related information to candidates, all copyright acknowledgements are reproduced online in the Cambridge International Examinations Copyright Acknowledgements Booklet. This is produced for each series of examinations and is freely available to download at www.cie.org.uk after the live examination series.

Cambridge International Examinations is part of the Cambridge Assessment Group. Cambridge Assessment is the brand name of University of Cambridge Local Examinations Syndicate (UCLES), which is itself a department of the University of Cambridge.